BICARB MIX & DISTRIBUTION SYSTEM
Installation/Operation Manual

Manufactured With Pride
In The USA

www.ameriwater.com • 800-535-5585

AmeriWater • 3345 Stop 8 Rd. • Dayton, OH 45414

98-0005 Rev. Y

Contents

1.0 INTRODUCTION 1

2.0 THEORY OF OPERATION 2

.....2

3.0 INSTALLATION REQUIREMENTS.....3

4.0 START-UP AND OPERATION 6

4.1 DISINFECTION WITH CHLORINE OR PERACETIC ACID (PAA) 8

4.1.1 RINSE RESIDUALS OUT OF THE BICARB SYSTEM _____8

4.1.2 ADD DISINFECTANT _____9

4.1.3 RINSE OUT DISINFECTANT _____12

4.2 DISINFECTION WITH THE AMERIWATER OZONE DISINFECTION SYSTEM 13

4.3 MIXING BICARBONATE SOLUTION (BICARB) 18

4.4 DISTRIBUTION OF BICARBONATE SOLUTION (BICARB) 20

4.5 MAKING ADDITIONAL BATCHES OF (BICARB) SOLUTION 20

4.6 END OF DAY PROCEDURES 21

4.7 ALARMS 23

5.0 MAINTENANCE 24

6.0 TANK INTERNALS REPLACEMENT ASSEMBLIES 25

7.0 CONTROLLER SCHEMATIC 30

8.0 PARTS LIST.....32

1.0 INTRODUCTION

CAUTION: Federal law restricts this device to sale by or on the order of a physician for use in hemodialysis applications!

NOTE: This entire Operations Manual should be read before operating or servicing the system. The Operations Manual should then be kept near the system and used as a reference guide!

This manual has been provided for the installation, operation, and maintenance of dual tank Bicarb Mix and Distribution Systems. These AmeriWater Bicarb systems are constructed of virgin polyethylene tanks with sealed lids and cone bottoms, complete drain fittings, and 10-inch gasketed access ports. Piping and valves are PVC schedule 80 or PVC schedule 40. The pumps are 120V, single-phase, 0.75 horsepower motors, with polypropylene pump ends. The control is 120V with timed fill, timed mix, and a high level alarm for the mix tank. The mix tank also has a manual fill valve. The high vortex pumped mixing action provides complete mixing in minutes and keeps the bicarbonate powder in solution. The distribution tank has a manual fill with low and high level alarms.

The lightly pressurized distribution/recirculation of the distribution tank provides consistent delivery and facilitates complete and efficient disinfection. These dual tank AmeriWater Bicarb Systems are provided with connection points needed to install the standard ozone disinfection hoses provided with the AmeriWater Ozone Disinfection System.

These Bicarb Systems are designed to mix, transfer, and distribute multiple batches of Bicarb solution for each days use. These Bicarb Systems are not equipped with monitoring devices such as conductivity or pH. Therefore, the solution manufacturer's procedures should be followed and are the sole responsibility of the user.

Please read the Operations Manual before using the system. Contact AmeriWater Customer Service with any questions at 1-800-535-5585 Monday through Friday 8:00 a.m. to 5:00 p.m. eastern standard time. For after hours emergencies call 1-800-535-5585 and follow the instructions on the recorded message. Our on-call technician will return your call as soon as possible.

WARNING: No person should attempt to operate or service the system without prior authorization, instruction, and training from AmeriWater and/or your medical facility director!

2.0 THEORY OF OPERATION

Mix Tank

The mix tank is filled to a desired level with RO water. The filling process is automatically controlled by a flow control and a solenoid valve, operated by a pre-set timer. The operator can interrupt the automatic filling by turning the "FILL" switch to OFF then RESET. The tank can be manually filled, by opening the "MIX FILL" ball valve. As the bicarbonate powder is added, the system utilizes the pump discharge to force the liquid through an eductor to mix and quickly dissolve the powder, to become the Bicarb solution.

Distribution Tank

After the mixing cycle is complete, the Bicarb solution is transferred from the mix tank to the distribution tank. The distribution tank utilizes a "TEE" style header to keep the bicarb powder in solution within the tank, and while it is being pumped throughout the distribution loop. The return loop is discharged to the bottom of the distribution tank to prevent the loss of CO_2.

Alarms

Both the mix and the distribution tanks are equipped with high-level alarms. The distribution tank also has a low level alarm. The functions of each alarm are listed below. The audible horn can be silenced but the warning light remains lit until the condition has been corrected.

- *Mix Tank High Level Alarm* – deactivates the automatic filling of the mix tank (no audible or visual indicators).
- *Distribution Tank High Level Alarm* – activates an audible and visual alarm
- *Distribution Tank Low Level Alarm* – activates an audible and visual alarm, and shuts off the distribution pump.

Disinfection

The mix and distribution tanks are designed for quick disinfection. The tanks utilize a spray nozzle to completely spray the inside of the tanks during disinfection. The pressurized distribution and recirculation facilitates complete and efficient disinfection. All dual tank AmeriWater Bicarb Systems are provided with the connection areas needed to install the standard ozone disinfection connections provided with the AmeriWater Ozone Disinfection System.

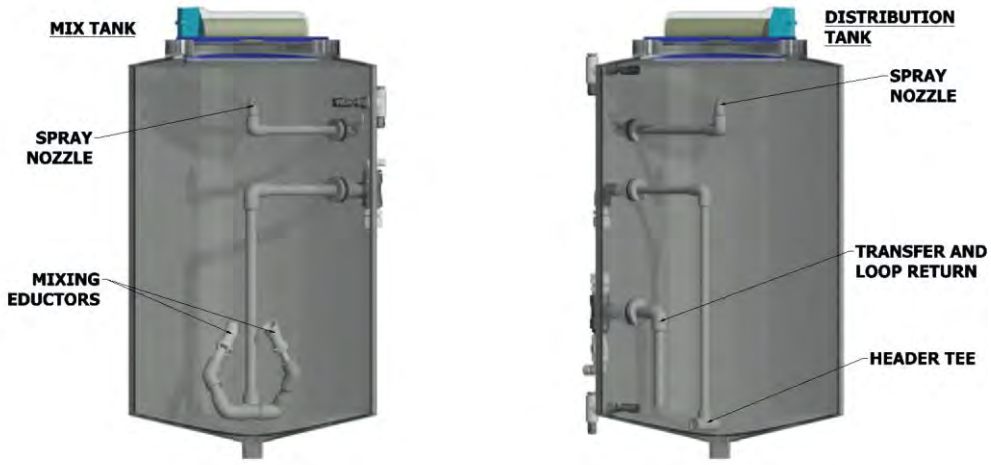

3.0 INSTALLATION REQUIREMENTS

CAUTION: Local plumbing and electrical codes must be observed!

The following requirements must be satisfied to insure proper installation and operation of the Bicarb System. Refer to Section 6.0, System Drawings, for additional information.

1. Locate the Bicarb System on a level floor and as close as possible to a floor drain (to facilitate draining of the Bicarb System).

2. Locate the Bicarb system as close as possible to the water supply loop to minimize the length of the connecting hose.

3. Connect plumbing frame to the mix and distribution tanks at the appropriate connectors. Match and attach the hoses from the plumbing to the appropriate ports on the mix and distribution tanks (see Fig. 3-1).

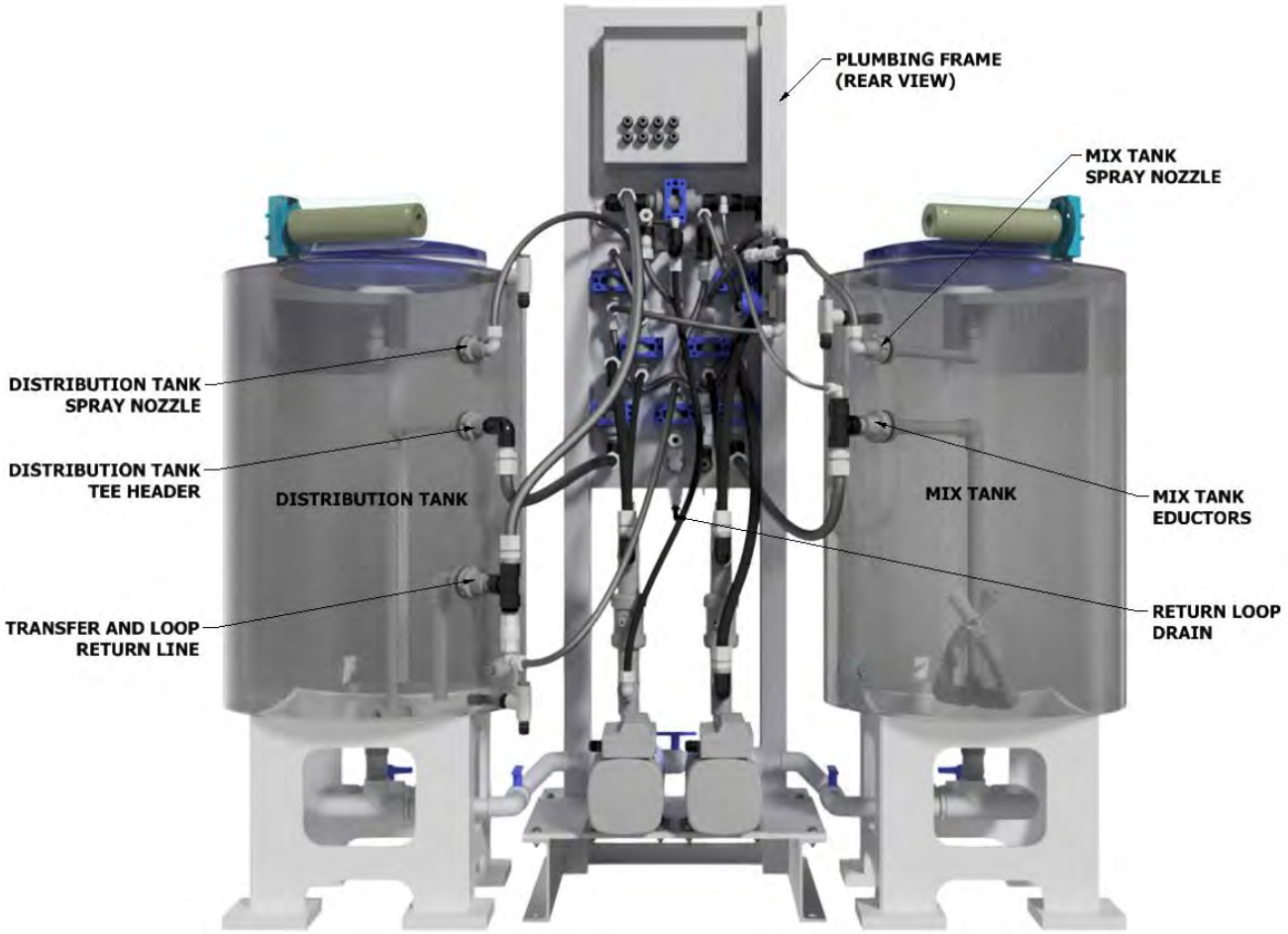

Fig. 3-1

4. Make sure to use an isolation valve at the purified water connection, and then connect the (6') inlet hose from the back of the plumbing frame (see Fig. 3-2). Note: AmeriWater recommends installing the valve on the center line of either tank instead of directly behind the tower. This will allow easy access to the valve and hose.

5. Connect (recommended ½" o.d. blue polyethylene) tubing to the "Loop Feed" connection fitting, located on back of the plumbing frame, and the other end to the bicarb distribution loop.

6. Connect the returning end of the bicarb loop (½" outside diameter blue polyethylene tubing), to the "Loop Return" connection fitting (see Fig. 3-2).

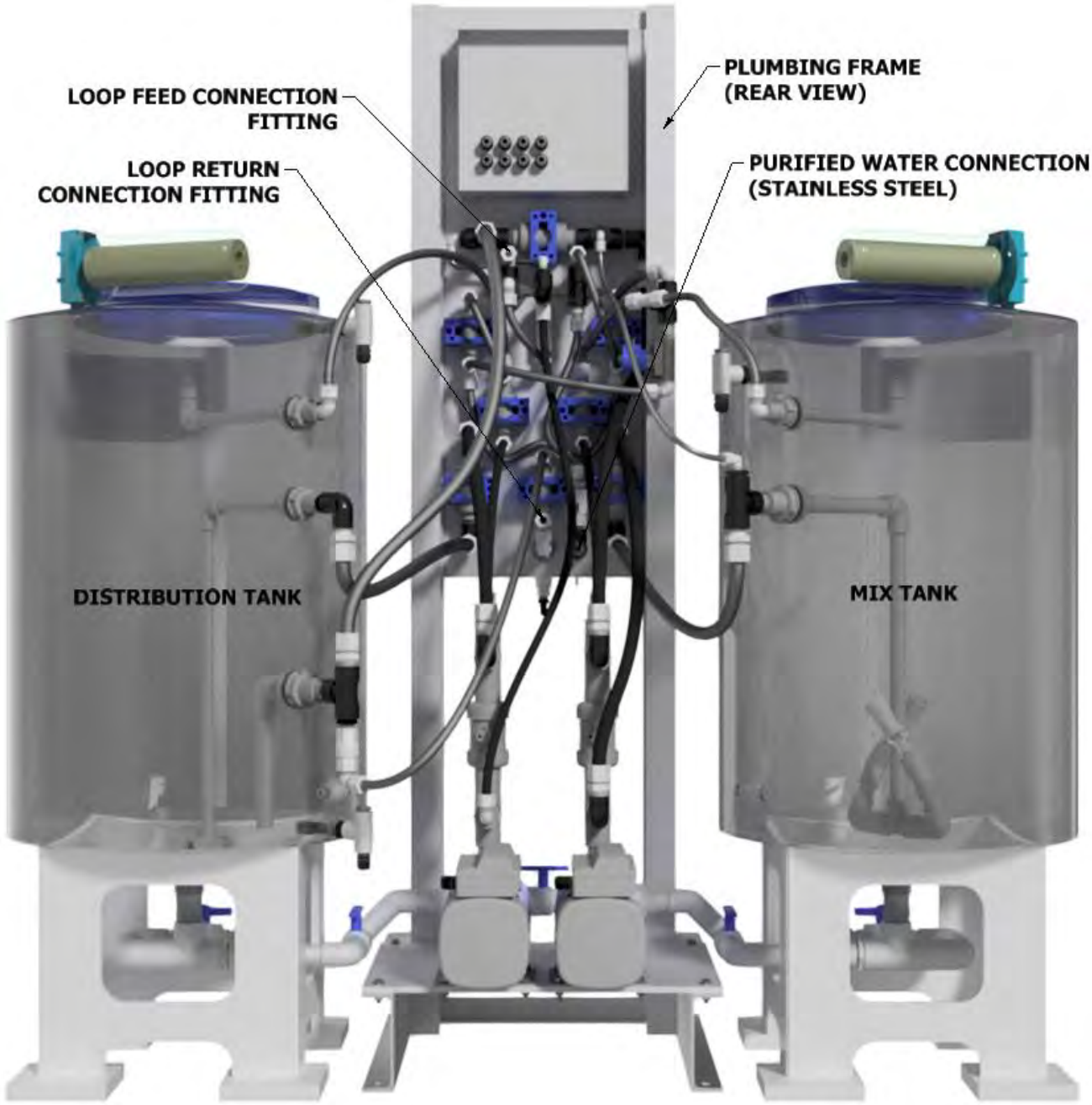

Fig. 3-2

7. Connect a length of ½” i.d. hose from the barbed fitting on valve 9D (see Fig. 4-1), and run that hose to the drain.

8. Make sure all Bicarb system valves are closed, power cord is unplugged, and switches are turned off. Connect Mix Tank high-level float switch wires to terminals 7 & 21 in the control box.

9. Connect the Distribution Tank high-level float switch wires to terminals 7 and 22, and the Distribution Tank low-level float switch wires to terminals 7 and 15 in the control box.

10. Connect remote alarm if applicable (follow instructions provided with ***main*** alarm panel).

11. Connect each Tank Vent Filter [OUT to nipple] and make sure O-Ring is in the housing.

12. Plug Bicarb controller in a dedicated 120V, 20 AMP, single-phase, GFI electrical service.

4.0 START-UP AND OPERATION

Please read and follow the guidelines and recommendations of the solution manufacturer before beginning with the start-up procedures. Refer to Fig. 4-1 to reference control panel and valve designations.

WARNING: **Bicarb Systems must be disinfected prior to placing systems in service! Failure to comply may result in injury, illness, or death to the patient(s)!**

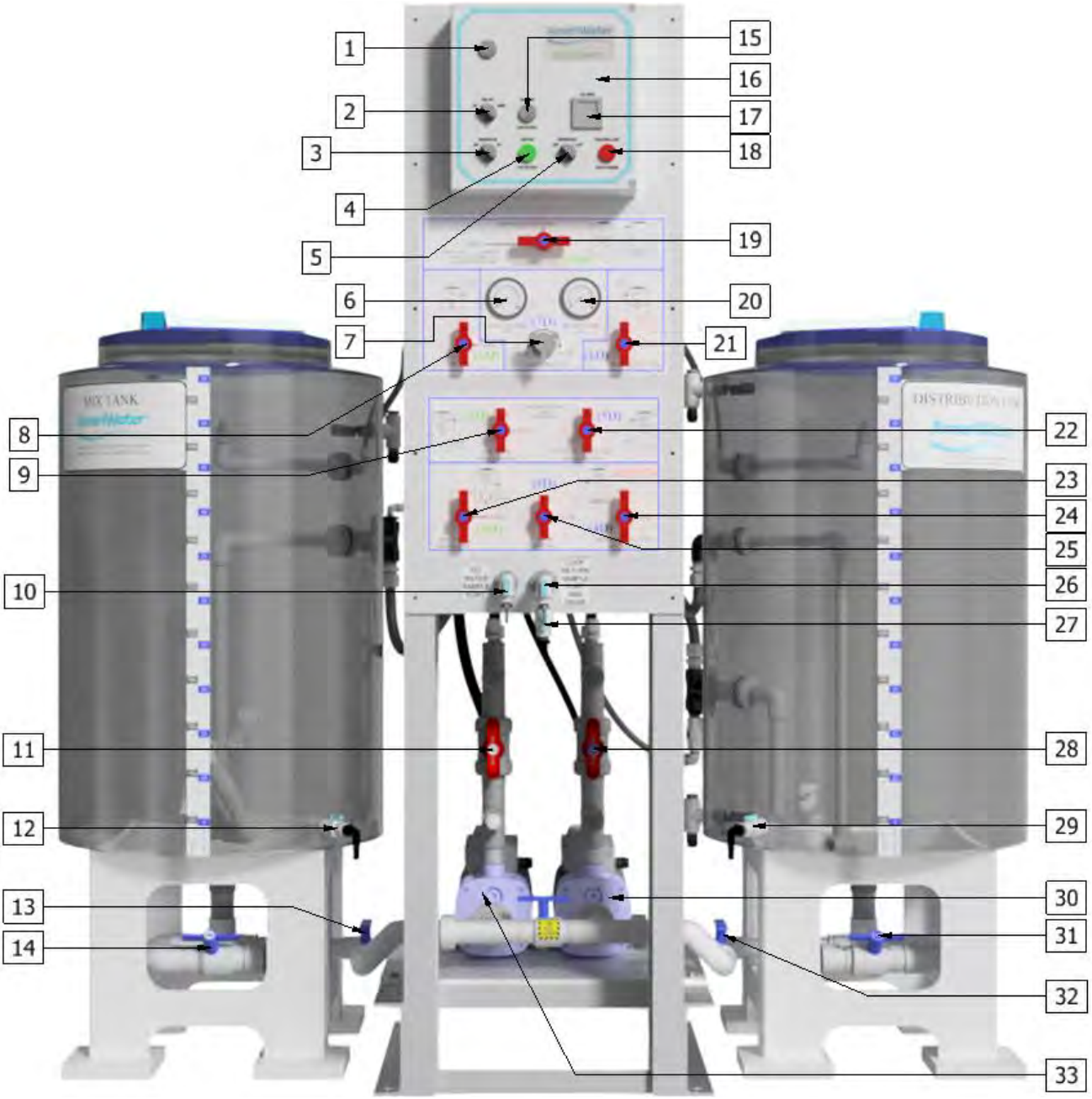

Fig. 4-1
FRONT VIEW
BICARB CONTROL PANEL AND VALVE DESIGNATIONS
(SEE NEXT PAGE FOR KEY)

Fig. 4-1 Key

ITEM	DESCRIPTION
1	ALARM HORN
2	FILL SWITCH
3	TRANSFER MIX SWITCH
4	MIX START BUTTON
5	DISTRIBUTION SWITCH
6	INLET WATER PRESSURE GAUGE
7	VALVE 7D, LOOP THROTTLE VALVE
8	VALVE 6M, MIX TANK FILL VALVE
9	VALVE 5M, MIX TANK SPRAY-DOWN VALVE
10	RO WATER SAMPLE PORT
11	VALVE 1M, MIX PUMP DISCHARGE VALVE
12	MIX TANK SAMPLE PORT
13	VALVE 8M, MIX TANK OUTLET VALVE
14	VALVE 9M, MIX TANK DRAIN VALVE
15	FILL START BUTTON
16	BICARB CONTROLLER
17	FILL TIMER
18	TANK LEVEL ALARM
19	VALVE 7M, TRANSFER VALVE
20	BICARB LOOP PRESSURE GAUGE
21	VALVE 6D, DISTRIBUTION FILL VALVE
22	VALVE 5D, DISTRIBUTION TANK SPRAY-DOWN VALVE
23	VALVE 4M, MIX TANK MIX NOZZLE VALVE
24	VALVE 4D, DISTRIBUTION TANK MIX NOZZLE VALVE
25	VALVE 8D, LOOP RETURN VALVE
26	LOOP RETURN SAMPLE PORT
27	VALVE 9D, LOOP DRAIN VALVE
28	VALVE 1D, DISTRIBUTION PUMP DISCHARGE VALVE
29	DISTRIBUTION TANK SAMPLE PORT
30	PUMP, DISTRIBUTION
31	VALVE 11D, DISTRIBUTION TANK DRAIN VALVE
32	VALVE 10D, DISTRIBUTION TANK OUTLET VALVE
33	PUMP, MIX

Fig. 4-1 Note: Place the 6 foot long inlet and disinfection hose on the stainless steel barbed fitting on the back of the inlet tee. Thread the male CPC fitting into the inlet water valve on the wall and connect the female CPC fitting on the remaining end of the 6 foot long hose to it.

4.1 DISINFECTION WITH CHLORINE OR PERACETIC ACID (PAA)

Perform the recommended disinfection and rinse procedures as established by your facility medical director before placing the Bicarb Mix & Distribution System into service. After the disinfection, rinse with purified water until a residual disinfectant test of less than 0.1ppm (or 0.1mg/L) is obtained.

WARNING: No dialysis equipment may be connected for use during the disinfection. Verify that all points of use are disconnected and all patient treatments have been completed.

WARNING: Label all wallboxes (points of use) and the Bicarb Mix and Distribution System with prominent and legible warning signs stating "DO NOT USE, CONTAINS DISINFECTANT." Always rinse the entire system thoroughly following any disinfection, to prevent injury or illness to the patient(s)!

CAUTION: Always use a collection device to catch fluids when disconnecting hoses or opening sample ports!

CAUTION: Always follow safety procedures when handling any chemicals!

CAUTION: Exposure to hydrogen peroxide/peroxyacetic acid concentrate or solution may cause severe chemical burns to skin or eyes. Additional information regarding the use of hydrogen peroxide/peroxyacetic acid is contained on your PAA bottle, and the Material Safety Data Sheet. Please read all of the information carefully before using these chemical products.

4.1.1 RINSE RESIDUALS OUT OF THE BICARB SYSTEM

1. Make sure valves 6M, 6D and 8D are closed and all switches are off.
2. Open valves 1M, 1D, 4M, 4D, 5M, 5D, 7M, 7D, 8M, 9M, 9D, 10M, 10D and 11D to completely drain both tanks, pumps, the loop and all associated plumbing.
3. When the system is completely drained close all valves.
4. Set Fill Timer to 1 minute, open Inlet Water Supply Valve, turn Fill Switch ON, and push Fill Start button.
5. Upon completion turn Fill Switch to RESET.
6. Open RO Water Sample Port for 10 seconds then close it.
7. Open valves 6M and 6D to fill the Mix and Distribution Tanks a quarter full. When both tanks are a quarter full, close 6M and 6D.
8. Open valves 1M, 1D, 4M, 4D, 5M, 5D, 8M, 9D, 10M, 10D, and fully open 7D.
9. Turn the Transfer/Mix Switch ON and push the Mix Start button. NOTE: The Mix Timer may time out during this procedure. When this occurs, push the Mix Start button again to reset the timer and turn the pump back on.
10. Turn the Distribution Switch to AUTO.

11. Verify that the water level in the Mix Tank remains equal to the water level in the Distribution Tank (+ or - 10 gallons). If it does not, check the valve positions to ensure that they are correct and verify that both pumps are running.

12. Open 7M and close 4M. After 10 seconds, close 7M and open 4M.

13. Open the Mix Tank Sample Port and let the rinse water flow for about 10 seconds before testing.
    a. Use a test strip to verify the pH level is ≤ 8.
    b. Close the sample port when sampling is complete.

14. Open the Loop Return Sample Port and let the rinse water flow for about 10 seconds before testing.
    a. Use a test strip to verify the pH level is ≤ 8.
    b. Close the sample port when sampling is complete.

15. Open 8D and close 9D.

16. Open the Distribution Tank Sample Port and let the rinse water flow for about 10 seconds before testing.
    a. Use a test strip to verify the pH level is ≤ 8.
    b. Close the sample port when sampling is complete.

17. Open the bicarb ports, one at a time, in all of the wall boxes on the loop for a minimum of 10 seconds before testing.
    a. Use a test strip to verify the pH level is ≤ 8 at each wall box.
    b. Close the wall box bicarb ports when sampling is complete.

18. Turn the Transfer/Mix Switch OFF.

19. Turn the Distribution Switch OFF.

20. Open valves 9M, 11D, 6M, 6D, 7M, and 9D.

21. Close the Inlet Water Supply Valve.

22. Let the water drain as completely as possible from both tanks, both pumps, the loop, and all associated plumbing.

23. When draining is complete, verify that both tank lids are closed and all switches are turned OFF.

24. Close all valves and points of use on the bicarb system.

25. Repeat steps 4 thru 25 until the pH is ≤ 8.

4.1.2 ADD DISINFECTANT

1. Complete all steps found in 4.1.1 RINSE RESIDUALS OUT OF THE BICARB SYSTEM.

2. Verify that both tank lids are closed and all switches are turned OFF.

3. Verify that all valves and points of use on the bicarb system are closed and all points of use are labeled to prevent inadvertent use during disinfection.

4. Open the Inlet Water Supply Valve, 6M & 6D to fill the Mix and Distribution Tanks a quarter full.

5. When both tanks are a quarter full, close 6M and 6D.

6. Close the Inlet Water Supply Valve. Open 6M to relieve pressure.

7. Disconnect the CPC style quick connect fitting on the 6' inlet hose from the Inlet Water Supply Valve and reconnect it to the mating fitting below valve 1M.

8. Close valve 6M and open 10M.

9. Verify that valves 5M, 5D, and 7M are closed.

10. Open the Mix and Distribution Tank lids.
    a. Carefully add the chlorine or peracetic acid (PAA) to both tanks.
    b. Close the tank lids securely and completely.

    NOTE: Ameriwater recommends 32 ounces (950 mL) of chlorine or peracetic acid (PAA) for every 25 gallons of water (1:100 mix ratio of disinfectant to water).

11. Open valves 1M, 1D, 4M, 4D, 8M, 8D, 10D, and fully open valve 7D.

12. Turn the Transfer/Mix Switch ON and push the Mix Start button. NOTE: The Mix Timer may time out during this procedure. When this occurs, push the Mix Start button again to reset the timer and turn the pump back on.

    CAUTION: If 5M is open, water and disinfectant can spray out of the Mix Tank while the tank lid is open and the Mix Pump is running!

13. Turn the Distribution Switch to AUTO.

14. Verify that the water level in the Mix Tank remains equal to the water level in the Distribution Tank (+ or – 10 gallons). If it does not, check the valve positions to ensure that they are correct and verify that both pumps are running.

15. Open the Mix Tank Sample Port and let the disinfectant solution flow for about 10 seconds before testing.
    a. Use a test strip to verify that the disinfectant concentration is at least 500 ppm.
    b. Close the sample port when sampling is complete.

    NOTE: If additional disinfectant is necessary to reach 500 ppm, open the Mix Tank lid, add disinfectant then close the tank lid.

16. Open the Distribution Tank Sample Port and let the disinfectant solution flow for about 10 seconds before testing.
    a. Use a test strip to verify that the disinfectant concentration is at least 500 ppm.
    b. Close the sample port when sampling is complete.

    NOTE: If additional disinfectant is necessary to reach 500 ppm, open the Distribution Tank lid, add disinfectant then close the tank.

17. Open the Loop Return Sample Port and let the disinfectant solutions flow for about 10 seconds before testing.
    a. Use a test strip to verify that the disinfectant concentration is at least 500 ppm.
    b. Close the sample port when sampling is complete.

18. Proceed to the next step only after the correct disinfectant concentrations have been confirmed at each of the above locations.

19. Open valves 6M and 6D. Operate in this configuration for 1 minute to disinfect the manual fill plumbing and spray disinfectant throughout the Mix and Distribution Tanks.

20. Close valve 6M & 6D. Carefully open the RO Water Sample Port for 10 seconds then close it.

21. Open valve 7M and operate in this configuration for 10 seconds to disinfect the transfer valve 7M internal components.

    DO NOT run longer than 10 seconds in this configuration (the transfer plumbing is exposed to disinfecting water the entire time the Mix and Distribution pumps are running).

    NOTE: The water level in the Mix Tank will lower slightly and the water level will rise slightly in the Distribution Tank.

22. Close valve 7M.

23. To disinfect the fill solenoid and flow control, turn the Fill Switch ON and push the Fill Start button. Allow to operate in this configuration for 10 seconds then turn the Fill Switch OFF.

24. Open valves 5M and 5D. Operate in this configuration for 1 minute to disinfect the spray plumbing and spray down the tanks.

25. Close valves 5M and 5D.

26. Open valve 9D for 10 seconds then close it.

27. Open the bicarb ports, one at a time, in all of the wall boxes on the loop for a minimum of 10 seconds before testing.
    a. Use a test strip to verify that the disinfectant concentration is at least 500 ppm at each wall box.
    b. Close the wall box bicarb ports when sampling is complete.

28. Turn the Transfer Mix Switch OFF.

29. Turn the Distribution Switch OFF.

30. Disconnect the CPC style quick connect fitting on the 6' inlet hose from the mating fitting below valve 1M and reconnect it to the Inlet Water Supply Valve.

31. Open valves 9M, 11D, 5M, 5D, 6M, 6D, 7M, and 9D.

32. Let the disinfectant solution drain as completely as possible from both tanks, both pumps, the loop, and all associated plumbing.

33. When draining of disinfectant is complete, verify that both tank lids are closed and all switches are turned OFF. Close all valves and points of use on the bicarb system.

4.1.3 RINSE OUT DISINFECTANT

1. Complete all steps found in 4.1.2 ADD DISINFECTANT.

2. Set Fill Timer to 1 minute, open Inlet Water Supply Valve, turn Fill Switch ON, and push Fill Start button.

3. Upon completion turn Fill Switch to RESET.

4. Open RO Water Sample Port for 10 seconds then close it.

5. Open valves 6M and 6D to fill the Mix and Distribution Tanks a quarter full. When both tanks are a quarter full close 6M and 6D.

6. Open valves 1M, 1D, 4M, 4D, 5M, 5D, 8M, 9D, 10D, 10M, and fully open valve 7D.

7. Turn the Transfer/Mix Switch ON and push the Mix Start button. NOTE: The Mix Timer may time out during this procedure. When this occurs, push the Mix Start button again to reset the timer and turn the pump back on.

8. Turn the Distribution Switch to AUTO.

9. Verify that the water level in the Mix Tank remains equal to the water level in the Distribution Tank (+ or - 10 gallons). If it does not, check the valve positions to ensure that they are correct and verify that both pumps are running.

10. Open 7M and close 4M. After 10 seconds, close 7M and open 4M.

11. Open the Mix Tank Sample Port and let the rinse water flow for about 10 seconds before testing.
    a. Use a test strip to test for residual disinfectant.
    b. Close the sample port when sampling is complete.

12. Open the Loop Return Sample Port and let the rinse water flow for about 10 seconds before testing.
    a. Use a test strip to test for residual disinfectant.
    b. Close the sample port when sampling is complete.

13. Open 8D and close 9D.

14. Open the Distribution Tank Sample Port and let the rinse water flow for about 10 seconds before testing.
    a. Use a test strip to test for residual disinfectant.
    b. Close the sample port when sampling is complete.

15. Open the bicarb ports, one at a time, in all of the wall boxes on the loop for a minimum of 10 seconds before testing.
    a. Use a test strip to test for residual disinfectant at each wall box.
    b. Close the wall box bicarb ports when sampling is complete.

16. Turn the Transfer/Mix Switch OFF.

17. Turn the Distribution Switch OFF.

18. Open valves 9M, 11D, 6M, 6D, 7M, and 9D.

19. Close the Inlet Water Supply Valve.

20. Let the water drain as completely as possible from both tanks, both pumps, the loop, and all associated plumbing.

21. When draining of disinfectant is complete, verify that both tank lids are closed and all switches are turned OFF.

22. Close all valves and points of use on the bicarb system.

23. Repeat steps 2 thru 23 until a negative residual for disinfectant is achieved.

24. When all of the disinfectant residual tests are negative, fill the Distribution Tank a quarter full with purified water by opening valve 6D and the Inlet Water Supply Valve.

25. Close 6D and the Inlet Water Supply Valve when the Distribution Tank is a quarter full.

26. It is recommended to allow the Distribution Tank to recirculate through the loop with valves 1D, 4D, 8D, 10D, and 7D fully open.

27. Turn the Distribution Switch to AUTO.

28. Log the disinfection completion in your facility's system daily checklist or journal.

4.2 DISINFECTION WITH THE AMERIWATER OZONE DISINFECTION SYSTEM

Perform the recommended disinfection and rinse procedures as established by your facility medical director before placing the Bicarb Mix & Distribution System into service. After the disinfection, rinse with purified water until a residual disinfectant test of less than 0.1ppm (or 0.1mg/L) is obtained.

WARNING: No dialysis equipment may be connected for use during disinfection. Verify that all points of use are disconnected and all patient treatments have been completed.

WARNING: Label all points of use (wallboxes, etc) and the Bicarb Mix and Distribution System with prominent and legible warning signs stating "DO NOT USE, CONTAINS DISINFECTANT." Always rinse the entire system thoroughly following any disinfection, to prevent injury or illness to the patient(s)!

WARNING: Oxygen is a fire hazard. It vigorously accelerates burning of combustibles. Do not use oil, grease, cotton fibers or any other combustible material on or near the Ozone or Oxygen Generator. Smoking, heat or any open flame should be kept at a distance of not less than 5 feet from any part of the system. It is STRONGLY recommended that only individuals experienced in the safe handling of Oxygen be allowed to operate this equipment.

CAUTION: Always use a collection device to catch fluids when disconnecting hoses or opening sample ports!

1. Complete all steps found in 4.1.1 RINSE RESIDUALS OUT OF THE BICARB SYSTEM.

2. Verify that both tank lids are closed and all switches are turned OFF.

3. Verify that all valves and points of use on the Bicarb System are closed and all points of use are labeled to prevent inadvertent use during disinfection.

4. Open the Inlet Water Supply Valve and 6M to fill the Mix Tank to the appropriate level.
   a. 55 gallon Mix Tank: Fill to 25 gallons then close 6M.
   b. 100 gallon Mix Tank: Fill to 50 gallons then close 6M.

5. Open 6D to fill the Distribution Tank to the appropriate level.
   a. 55 gallon Distribution Tank: Fill to 25 gallons then close 6D.
   b. 100 gallon Distribution Tank: Fill to 50 gallons then close 6D.

6. Close the Inlet Water Supply Valve. Open 6M to relieve pressure and remain open.

7. Connect the Ozone CPC Quick Connect U-Shaped Inlet Header to the mating ports below valves 1M and 1D.

8. Connect the Ozone CPC Quick Connect U-Shaped Outlet header to the mating ports above valves 1M and 1D.

9. Connect the Ozone System Inlet Hose CPC Quick Connect Fitting to the mating fitting on the Ozone CPC Quick Connect U-Shaped Inlet Header.

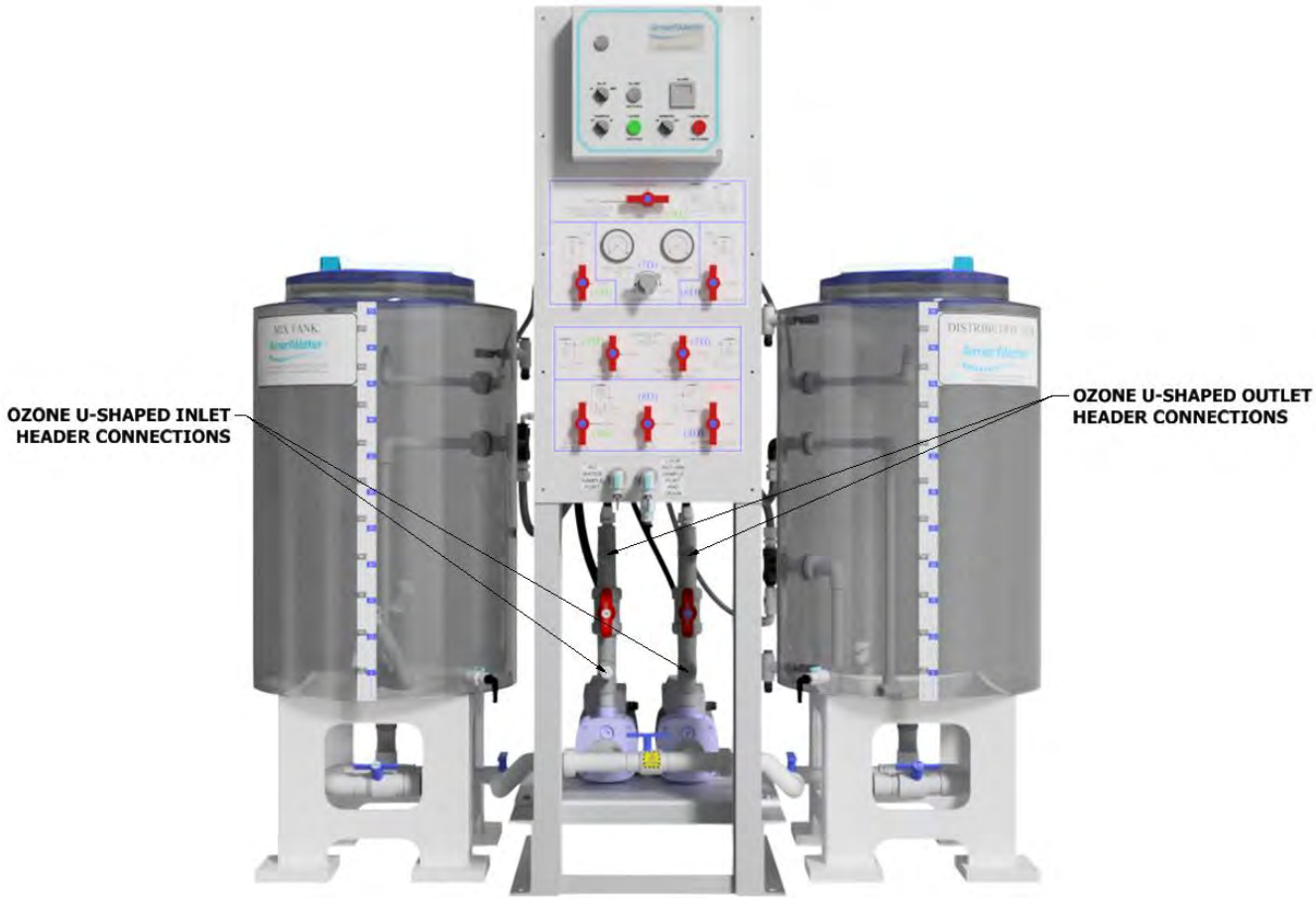

10. Connect the Ozone System Outlet Hose CPC Quick Connect Fitting to the mating fitting on the Ozone CPC Quick Connect U-Shaped Outlet Header.

11. Disconnect the CPC style quick disconnect fitting on the 6' inlet hose from the Inlet Supply Water Valve and reconnect it to the mating fitting on the Ozone CPC Quick Connect U-Shaped Inlet Header.

12. Close 6M and open 10M.

13. Verify that 5M, 5D, 6M, 6D, and 7M are closed.

14. Open 1M, 1D, 4M, 4D, and fully open 7D.

15. Open 8M, 10D, and 8D.

16. Verify that the Ozone Disinfection System test port is closed, and the power switch is OFF.

17. Plug the Ozone Disinfection System into a properly grounded, 120V outlet.

18. Connect the oxygen supply to the Oxygen Connect fitting on the front of the Ozone Disinfection System.

19. Turn the Bicarb System's Transfer/Mix Switch ON and push the Mix Start button.

    NOTE: The Mix Timer may time out during this procedure. When this occurs, push the Mix Start button again to reset the timer and turn the pump back on.

20. Turn the Distribution Switch to AUTO.

21. Check the connections for leaks prior to starting the Ozone Disinfection System.

22. Verify that the water level in the Mix Tank remains equal to the water level in the Distribution Tank (+ or - 10 gallons).
    a. If it does not, check the valve positions to ensure that they are correct and verify that both pumps are running.

23. Close 1M and 1D.

24. Verify that both the Mix and Distribution pumps begin pumping water into the Water Flowmeter Gauge on the Ozone Disinfection System.
    a. Adjust the Water Flowmeter valve so that the flow registers between 3.5 and 5.0 gallon per minute (gpm) on the Water Flowmeter.

25. Set the oxygen supply between 2 and 4 liters per minute as indicated on the regulating device of the oxygen concentrator or the oxygen bottle.

26. Open the Oxygen Flowmeter valve on the front of the Ozone Disinfection System.
    a. Adjust the oxygen flow until it is between 2 and 5 SCFH (Standard Cubic Feet per Hour) and until the vacuum gauge reads between -3" to -8" Hg (negative inches of mercury).

27. Turn the Ozone Disinfection System Switch ON (red toggle switch).

28. When the ON/OFF Switch is illuminated, ozonated water is being supplied to the system being disinfected.

29. Refer to the Ozone Disinfection System Operation Manual for troubleshooting if the light does not illuminate.

30. Run the Ozone Disinfection System until the ozonated water from the sample port on the Ozone Disinfection System has a reading greater than 0.5 mg/L (or 0.5 ppm).
    a. Use a RPC E-Z Chek® Ozone in Water Test Strip (AmeriWater part #97K100-0111).

31. Open the Mix Tank Sample Port and let the ozonated water flow for about 10 seconds before testing.

32. Verify ozone concentration at the Mix Tank Sample Port is ≥ 0.5 mg/L using a RPC Ozone Test Strip then close the sample port.

33. Open the Distribution Tank Sample Port and let the ozonated water flow for about 10 seconds before testing.

34. Verify ozone concentration at the Distribution Tank Sample Port is ≥ 0.5 mg/L using a RPC Ozone Test Strip then close the sample port.

35. Verify that the ozone concentration at the Loop Return Sample Port is ≥ 0.5 mg/L using a RPC Ozone Test Strip, then close the sample port.

36. Proceed to the next step only after the correct ozone concentrations have been confirmed at each of the above locations. Continue running the Ozone Disinfection System in this configuration until the correct ozone concentrations have been confirmed at each of the above locations.

37. Open 6M and 6D. Operate in this configuration for 5 minutes to disinfect the manual fill plumbing and spray disinfectant throughout the Mix and Distribution tanks.

38. Close 6M and 6D.

39. Open the Inlet Sample Port for 60 seconds then close it.

40. Open 7M and operate in this configuration for 1 minute to disinfect the transfer valve internal components.

    DO NOT run longer than 1 minute in this configuration (the transfer plumbing is exposed to ozonated water the entire time the ozone machine and the Mix and Distribution pumps are running).

    NOTE: The water level in the Mix Tank will lower slightly and the water level will rise slightly in the Distribution Tank.

41. Close valve 7M.

42. To disinfect the fill solenoid and flow control, turn the Fill Switch ON and push the Fill Start button.
    a. Operate in this configuration for 1 minute then turn the Fill Switch OFF.

43. Open 5M and 5D and operate in this configuration for 1 minute to disinfect the spray plumbing.

44. Close 5M and 5D.

45. Open 9D for 1 minute (flowing to drain) and then close 9D.

46. Open the bicarb ports, one at a time, in all of the wall boxes on the loop for a minimum of 10 seconds before testing.
    a. Verify that the ozone concentration at each bicarb port is ≥ 0.5 mg/L using a RPC Ozone Test Strip
    b. Close the wall box bicarb ports when sampling is complete.

47. Verify again that the ozone concentration at the Mix Tank Sample Port, the Distribution Tank Sample Port, and the Loop Return Sample Port is ≥ 0.5 mg/L using a RPC Ozone Test Strip.

48. Open 6M and 6D. This is a second power flush of the manual fill lines following the ozone soak".

49. Open 1M and 1D. The Ozone Disinfection System will turn off.

50. Turn the Transfer/Mix Switch OFF.

51. Turn the Distribution Switch OFF.
52. Turn the Ozone Disinfection System Switch OFF.

53. Relieve the pressure in the Ozone Disinfection System hoses by opening the Sample Port on the front of the Ozone Disinfection System.

54. Disconnect the Ozone Disinfection System Inlet Hose CPC Quick Connect Fitting from the mating fitting on the Ozone CPC Quick Connect U-Shaped Inlet Header.

55. Disconnect the Ozone Disinfection System Outlet Hose CPC quick connect fitting from the mating fitting on the Ozone CPC Quick Connect U-Shaped Outlet Header.

56. Finish disconnecting the Ozone Disinfection System, empty the hoses, and close the Sample Port on the front of the Ozone Disinfection System. The Ozone Disinfection System may now be stored until next use.

57. Disconnect the CPC style quick disconnect fitting on the 6' Inlet Hose from the CPC Quick Connect U-Shaped Inlet Header, and reconnect it to the mating fitting on the Inlet Water Supply Valve.

58. Disconnect the Ozone CPC Quick Connect U-Shaped Inlet Header from the mating ports below the Bicarb System valves 1M and 1D.

59. Disconnect the Ozone CPC Quick Connect U-Shaped Outlet Header from the mating ports above the Bicarb System valves 1M and 1D.

60. *****Close valve 10M*** (shown on right for reference)**

61. Open the Inlet Water Supply Valve.

62. If bicarb solution will not be mixed until the following day:
    a. Open 9M, 8M, 1M, 4M, and 5M.
    b. Remove the Mix Tank lid to allow the tank to air dry.
    c. Allow the Bicarb System Distribution side to recirculate overnight with valves 1D, 4D, 10D, 7D, and 8D fully open and the Distribution Switch set to AUTO.

63. To prepare the Bicarb Mix and Distribution System for use, drain and rinse entire Bicarb System, including the loop, and wallbox ports as found in section 4.1.1 "RINSE RESIDUALS OUT OF THE BICARB SYSTEM."

64. The system may now be used to mix and distribute bicarb solution.

65. Log the disinfection completion in your facility's system daily checklist or journal.

WARNING: **Bicarbonate powder should not be mixed with ozonated water. Drain the Mix Tank and fill it with fresh RO water before mixing with powder. If the bicarbonate powder is not going to be mixed until several hours after the completion of ozone disinfection, the ozonated water should be left in the system and the tank should be drained and refilled at the time of mixing.**

4.3 MIXING BICARBONATE SOLUTION (BICARB)

1. Verify the power cord of the Bicarb Mix and Distribution System is plugged into a 120V, 20 AMP, and dedicated, single-phase GFI receptacle.

2. The factory setting is 10 minutes on the timer, which is located inside the controller.

   WARNING: **Electrical shock can occur if the power is not disconnected!**

3. Verify that the Mix Tank is empty and clean by visual inspection and performing a residual disinfectant test before filling with purified water.

4. Verify that all valves and tank lids on the Bicarb System are closed.

5. Open 1M, 8M, 4M and the Inlet Water Supply Valve.

6. Determine the desired batch size (so that the Mix Tank fill level can be determined).

7. To fill the Mix Tank, check that the timer on the door front is set to the desired preset time value. Refer to 7d for changing or setting the Fill Timer.

   a. The following settings apply for fill times:
      23 minutes for the 00BC55-55 systems
      45 minutes for the 00BC100-100 and 00BC100-200 systems.
      The timer has been pre-set for each system at the time of assembly.

   b. A 2 GPM (gallon per minute) flow control is installed in the purified water supply line. When setting the fill time, divide the desired gallons by 2 to determine the time in minutes. (Check the Bicarb manufacturer's recommendation on the proper amount of water to be used). Example: 2 gpm x 11 mins = 22 gal. fill for a 25 gallon batch.

c. For best results fill the Mix Tank to a level 3 gallons lower than what is required before adding in the Bicarb.

d. To change or set the Fill Timer.
   - Press the MODE key once.
   - Press the « key to advance to the next digit in the Set Value Display.
   - Once you get to the desired position press the ⌃ or ⌄ keys to increase or decrease the number.
   - Press the « key to advance to the next position.
   - Press the MODE key to save the time.

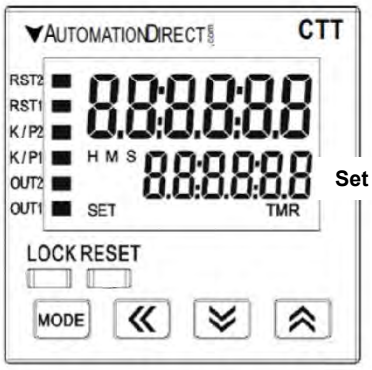

Set Value Display

8. Turn the Fill Switch ON.

9. Push the Fill Start button to begin the fill process.

10. When the Mix Tank is filled to the desired level, turn the Fill Switch OFF.

11. To change or set the Mix Timer.
   - Press the MENU/OK button once.
   - Press ▼ until “Parameter” is flashing on the display screen.
   - Press the MENU/OK button once.
   - Press ▼ once to select timer value.
   - Press ▲ or ▼ to modify the timer value.
   - Press the MENU/OK button once to confirm.
   - Press the MENU/OK button once to reset.
   - Press the MENU/OK button once to return to the main menu.

12. Turn the Transfer/Mix Switch ON.

13. Push the Mix Start button to begin mixing.

14. **Slowly, taking 1 to 2 minutes, add the bicarbonate powder to the mixing water then close the lid.**

WARNING: **Follow all of the bicarbonate powder manufacturer’s recommendations! (Such as use of personal protective equipment to prevent injury, illness, or for avoiding any possible contamination of the bicarbonate solution.)**

15. When the Mix Timer times out and Mix Pump has stopped, remove the Mix Tank lid and inspect the contents to verify that the powder has dissolved.

16. If there is any powder in the Mix Tank that has not dissolved, ensure that 5M and the Mix Tank lid are closed, then push the Mix Start button to allow additional mixing until all of the powder is dissolved.

17. Perform the powder manufacturer’s recommended test procedures on the solution to check the ratio by sampling from the Mix Tank Sample Port or other recommended locations per manufacturer’s requirements.

18. If the solution concentration is too high, add water by opening and closing 6M as needed to adjust the solution to a lower concentration or other recommended methods per manufacturer's requirements.

19. Log test results in your facility's daily checklist or journal.

4.4 DISTRIBUTION OF BICARBONATE SOLUTION (BICARB)

1. Complete all steps found in 4.3 MIXING BICARBONATE SOLUTION (BICARB).

2. Verify Distribution Tank is clean and ready for the Bicarb solution transfer.

3. Verify 11D and 10M are closed.

4. Push the Mix Start button, open 7M and close 4M.

WARNING: **Monitor the transfer closely and turn off the Mix Pump immediately when the Mix Tank is empty. Running a pump dry will result in pump damage!**

5. When the Bicarb solution has been transferred from the Mix Tank to the Distribution Tank, close 7M.

6. Turn the Transfer/Mix Switch OFF.

7. Open 1D, 10D, and 4D. Verify 5D is closed.

8. Turn the Distribution Switch to AUTO.

9. While the bicarb solution is mixing in the Distribution Tank, open 9D and fully open 7D to fill the distribution loop with the Bicarb solution while discharging the remaining rinse water to the drain.

10. Operate in this configuration for 5 minutes to prevent dilution of the Bicarb solution.

11. Open 8D and close 9D to begin distributing Bicarb solution through the Bicarb loop.

12. Adjust the loop pressure between 4 and 6 psi (pounds per square inch) by turning valve 7D.

NOTE: Valve 8D may have to be turned to the partially closed position in order to help with maintaining the recommended loop pressure.

4.5 MAKING ADDITIONAL BATCHES OF (BICARB) SOLUTION

1. Rinse the Mix Tank prior to mixing additional batches of Bicarb solution.

2. Open 6M and 9M to rinse the Mix Tank.

3. When the tank is rinsed clear close 6M.

4. When the tank is empty close 9M.

5. Mix the Bicarb Solution in accordance with the instructions in section 4.3 of the Installation/Operation Manual.

6. When mixing is complete:
   Transfer the mixed batch of Bicarb solution when the level in the Distribution Tank is at or near the Low Level Alarm.

7. Push the Mix Start button, open 7M and close 4M.

   WARNING: **Monitor the transfer closely and turn off the Mix Pump immediately when the Distribution Tank is full or when the Mix Tank is empty. Running a pump dry will result in pump damage!**

8. When the Bicarb solution has been transferred from the Mix Tank to the Distribution Tank, close 7M.

9. Turn the Transfer/Mix Switch OFF.

10. Open 6M and 9M to rinse the Mix Tank.

11. When the tank is rinsed clear close 6M.

12. When the tank is empty close 9M.

13. Multiple batches of Bicarb solution may be mixed and transferred to the Distribution Tank during the same treatment day.

14. AAMI standards and CMS regulations require that bicarbonate mixing and delivery systems be cleared of bicarbonate solution and rinsed clear at the end of each treatment day.

4.6 END OF DAY PROCEDURES

The Bicarb Mix and Distribution System should be cleared of all bicarbonate solution at the end of each treatment day.

Follow these steps to rinse out the system, clearing it of all bicarbonate solution:

1. Make sure valves 6M, 6D and 8D are closed and all switches are off.

2. Open valves 1M, 1D, 4M, 4D, 5M, 5D, 7M, 7D, 8M, 9M, 9D, 10M, 10D and 11D to completely drain both tanks, pumps, the loop and all associated plumbing.

3. When the system is completely drained close all valves.

4. Set Fill Timer to 1 minute, open Inlet Water Supply Valve, turn Fill Switch ON, and push Fill Start button.

5. Upon completion turn Fill Switch to RESET.
6. Open RO Water Sample Port for 10 seconds then close it.

7. Open valves 6M and 6D to fill the Mix and Distribution Tanks a quarter full. When both tanks are a quarter full, close 6M and 6D.

8. Open valves 1M, 1D, 4M, 4D, 5M, 5D, 8M, 9D, 10M, 10D, and fully open 7D.

9. Turn the Transfer/Mix Switch ON and push the Mix Start button. NOTE: The Mix Timer may time out during this procedure. When this occurs, push the Mix Start button again to reset the timer and turn the pump back on.

10. Turn the Distribution Switch to AUTO.

11. Verify that the water level in the Mix Tank remains equal to the water level in the Distribution Tank (+ or - 10 gallons). If it does not, check the valve positions to ensure that they are correct and verify that both pumps are running.

12. Open 7M and close 4M. After 10 seconds, close 7M and open 4M.

13. Open the Mix Tank Sample Port and let the rinse water flow for about 10 seconds before testing.
    a. Use a test strip to verify the pH level is ≤ 8.
    b. Close the sample port when sampling is complete.

14. Open the Loop Return Sample Port and let the rinse water flow for about 10 seconds before testing.
    a. Use a test strip to verify the pH level is ≤ 8.
    b. Close the sample port when sampling is complete.

15. Open 8D and close 9D.

16. Open the Distribution Tank Sample Port and let the rinse water flow for about 10 seconds before testing.
    a. Use a test strip to verify the pH level is ≤ 8.
    b. Close the sample port when sampling is complete.

17. Open the bicarb ports, one at a time, in all of the wall boxes on the loop for a minimum of 10 seconds before testing.
    a. Use a test strip to verify the pH level is ≤ 8 at each wall box.
    b. Close the wall box bicarb ports when sampling is complete.

18. Turn the Transfer/Mix Switch OFF.

19. Turn the Distribution Switch OFF.

20. Open valves 9M, 11D, 5M, 5D, 6M, 6D, 7M, and 9D.

21. Close the Inlet Water Supply Valve.

22. Let the water drain as completely as possible from both tanks, both pumps, the loop, and all associated plumbing.

23. When draining is complete, verify that both tank lids are closed and all switches are turned OFF.

24. Close all valves and points of use on the bicarb system.

25. Repeat steps 4 thru 25 until the pH is ≤ 8.

26. When all of the disinfectant residual tests are negative, fill the Distribution Tank a quarter full with purified water by opening valve 6D and the Inlet Water Supply Valve.

27. Close 6D and the Inlet Water Supply Valve when the Distribution Tank is a quarter full.

28. It is recommended to allow the Distribution Tank to recirculate through the loop with valves 1D, 4D, 8D, 10D, and 7D fully open.

29. Turn the Distribution Switch to AUTO.

CAUTION: Bicarbonate mixing and delivery systems must be cleared of bicarbonate solution and rinsed clear at the end of each treatment day, as well as prior to preparing new batches of solution!

4.7 ALARMS

The Distribution Tank is equipped with a high level and low-level alarm. In the event the Distribution Tank level is high, an audible alarm (horn) will sound, and a (red) indicator light will illuminate.

Pushing the Tank Level Alarm button will silence the audible alarm (horn) for 3 minutes and repeat with each pressing. The Tank Level Alarm (red) light will remain illuminated until the condition has been corrected. If the Distribution Tank level is low while in AUTO mode, the audible alarm (horn) will sound, the (red) light will illuminate and the distribution pump will shut off.

Pushing the Tank Level Alarm button will silence the audible alarm (for 3 minutes). The alarm light, however, will remain illuminated and the pump will remain off until the condition is corrected. In the event the Mix Tank level is high, the Mix Fill Timer solenoid valve will be de-energized (closing the valve) and stopping any timed fill operation.

5.0 MAINTENANCE

Maintenance is the responsibility of the operator. Scheduled disinfection and bacterial monitoring is to be established by your facility medical director. The medical director should decide if disinfection should be performed weekly or more often.

Daily Maintenance
Check the system plumbing for leaks or precipitation build up that may cause reduced flow or function of the system.

Weekly Maintenance
AmeriWater recommends disinfecting Bicarb Systems at least weekly, (based on ANSI/AAMI recommendations for weekly disinfection) or as directed by your facility's protocol.

Quarterly Maintenance
AmeriWater recommends that the Bicarb System be decalcified when deemed necessary. Vinegar is an acceptable solution for decalcifying the system. The system may have to be decalcified more often depending on the amount of calcium build up. Mix 1 gallon of vinegar per 25 gallons of water and recirculate through the loop and Mix Tank as though a chemical disinfection of the system were being performed (see Section 4.1).

Annual Maintenance
AmeriWater recommends changing vent filters at least annually or anytime they become wet.

IMPORTANT: Log all maintenance in your facilities operation and maintenance journal per AAMI and your medical director's requirements.

6.0 TANK INTERNALS REPLACEMENT ASSEMBLIES

Tank Internals Replacement Assemblies are available in the event hot water enters the bicarb system plumbing during heat disinfection of the dialysis loop. The part numbers for these replacement assemblies have been provided in the Parts List at the end of this manual. Ref. IFU 98-9136 for instructions for replacing tank internals.

911-9118

Spray Nozzle Assembly for 55 Gallon Mix and Distribution Tank:

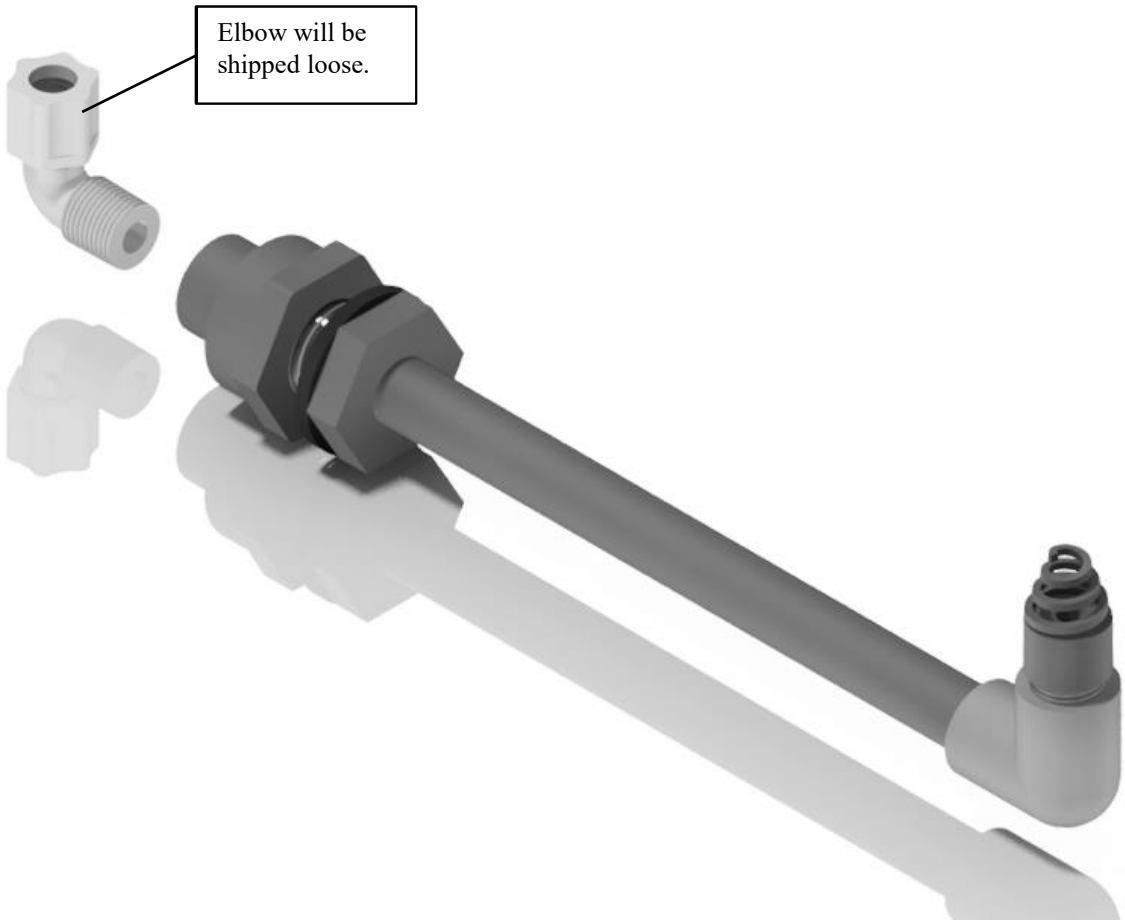

911-9119

Spray Nozzle Assembly for 100 Gallon Mix and Distribution Tank:

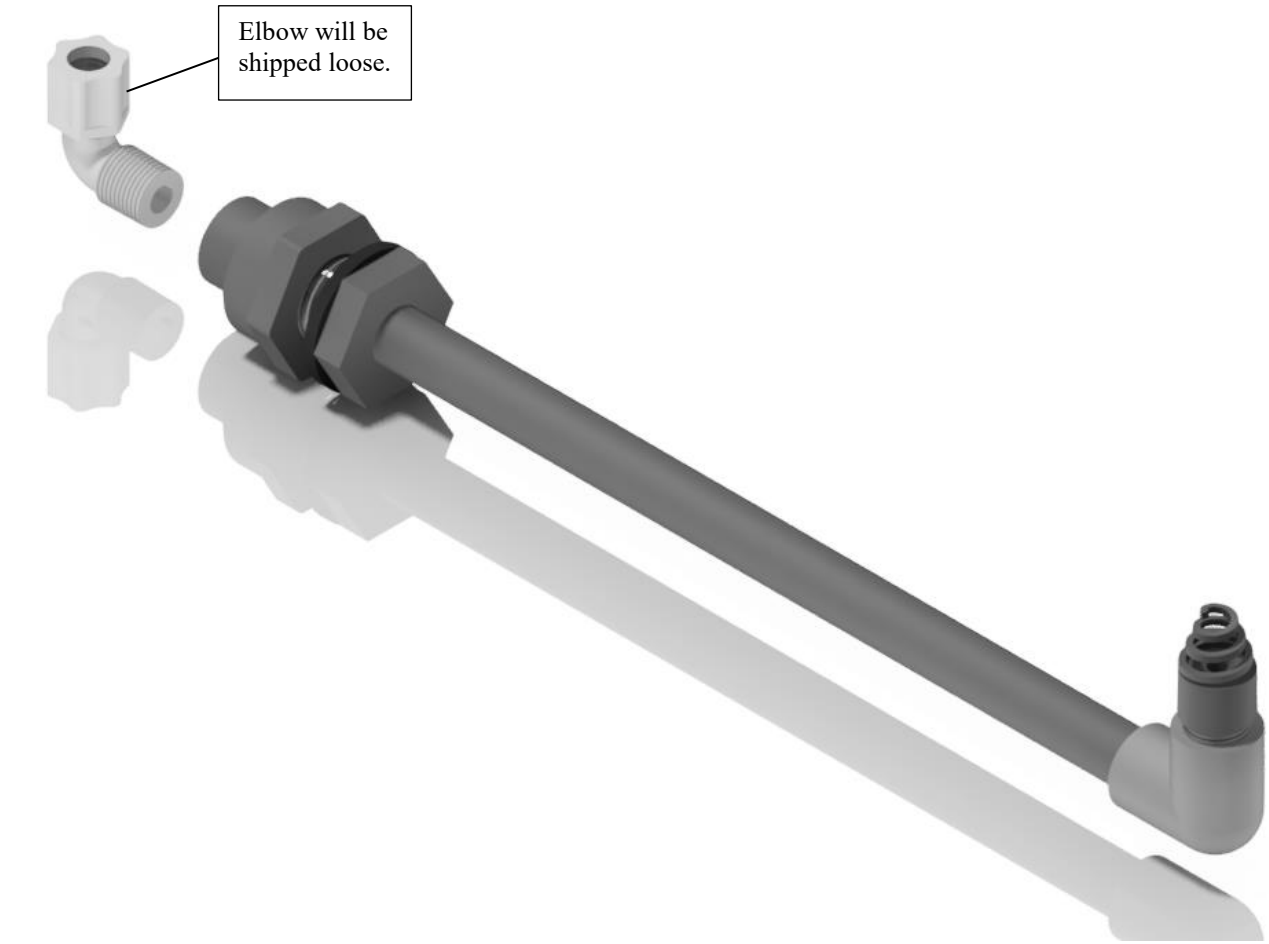

911-9120

Replacement Feed Line Assembly (Shown Exploded):

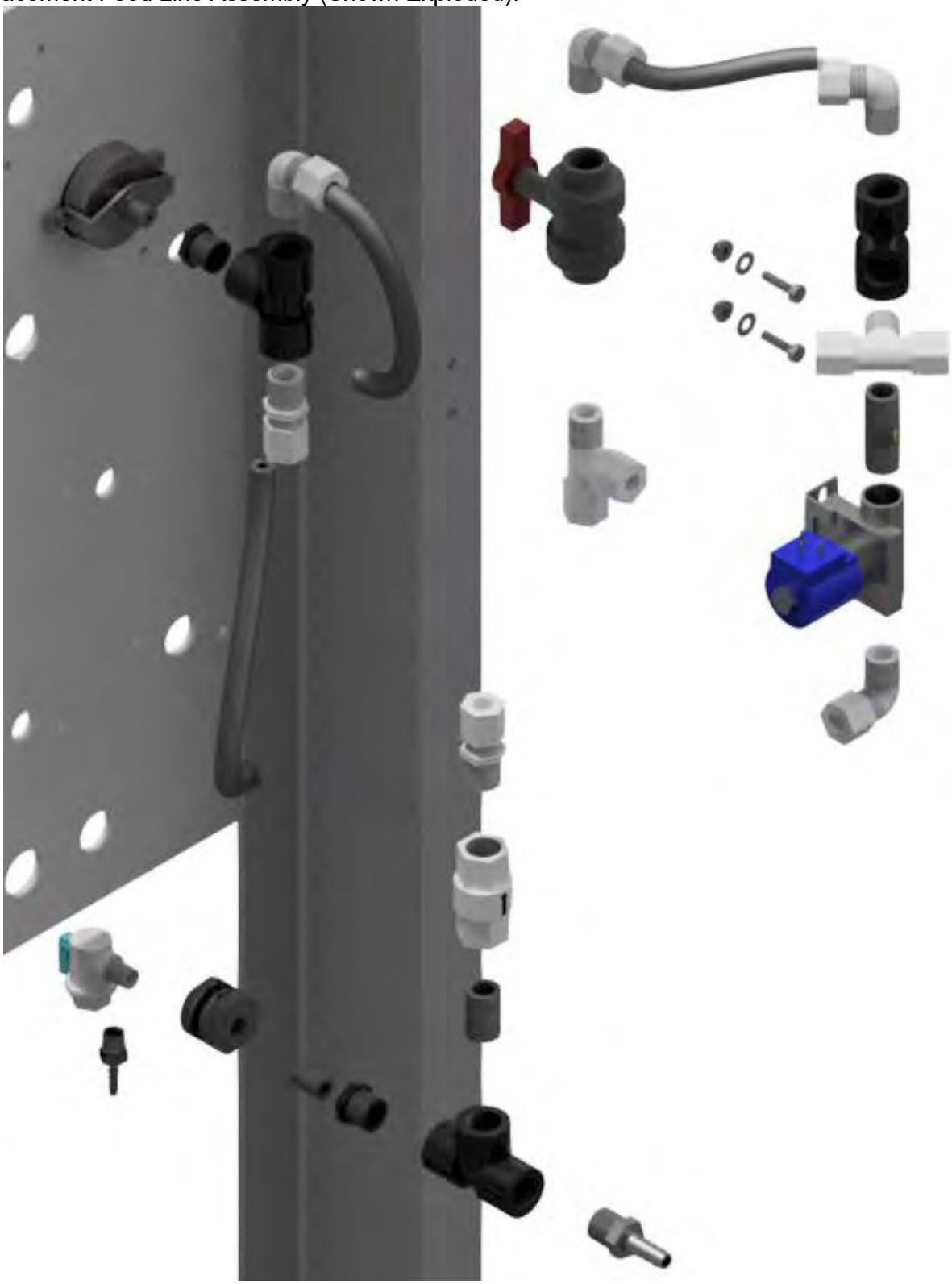

911-9120 CONTINUED

Replacement Feed Line Assembly (Shown Assembled):

911-9121

55 Gallon Mix Tank

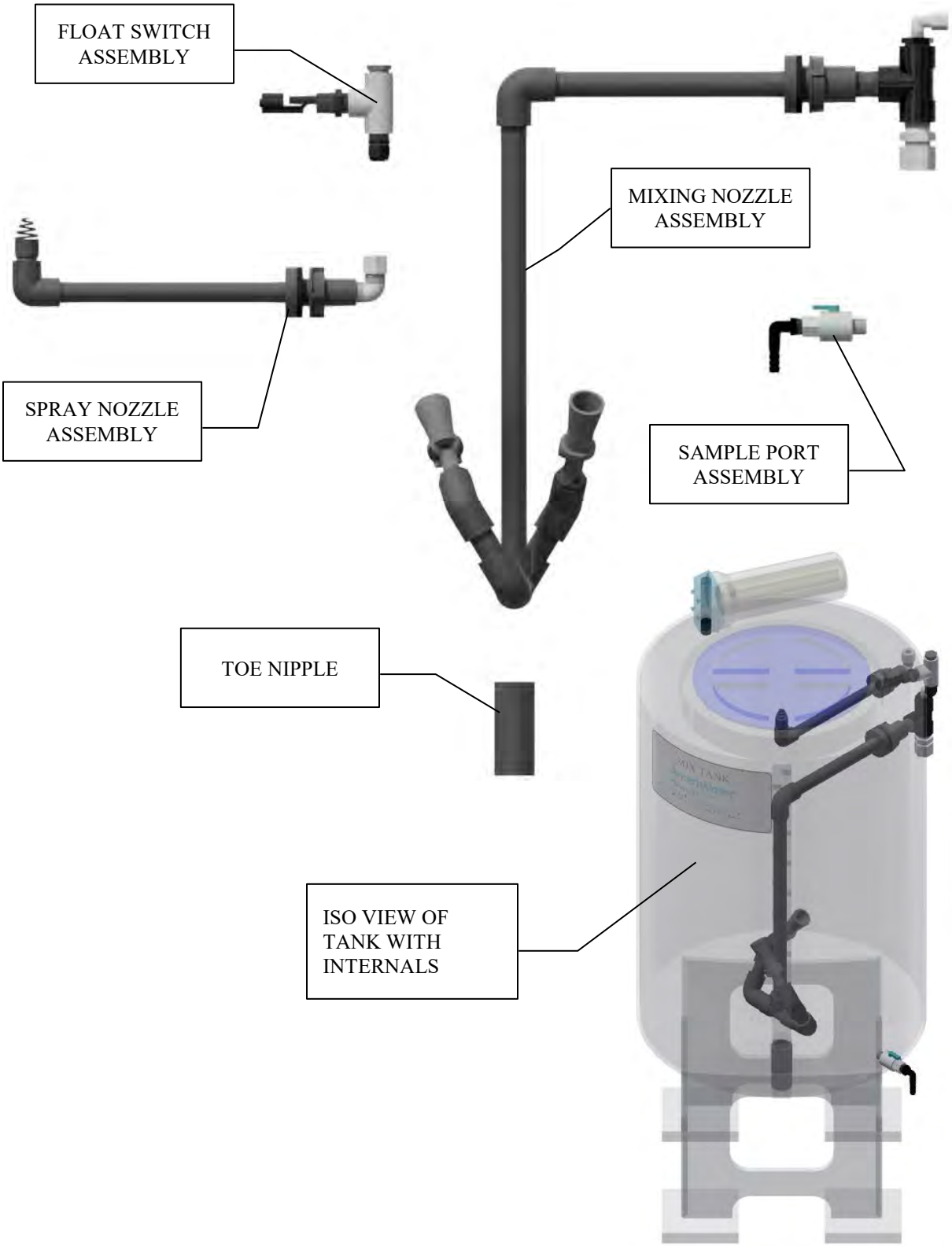

911-9122

100 Gallon Mix Tank

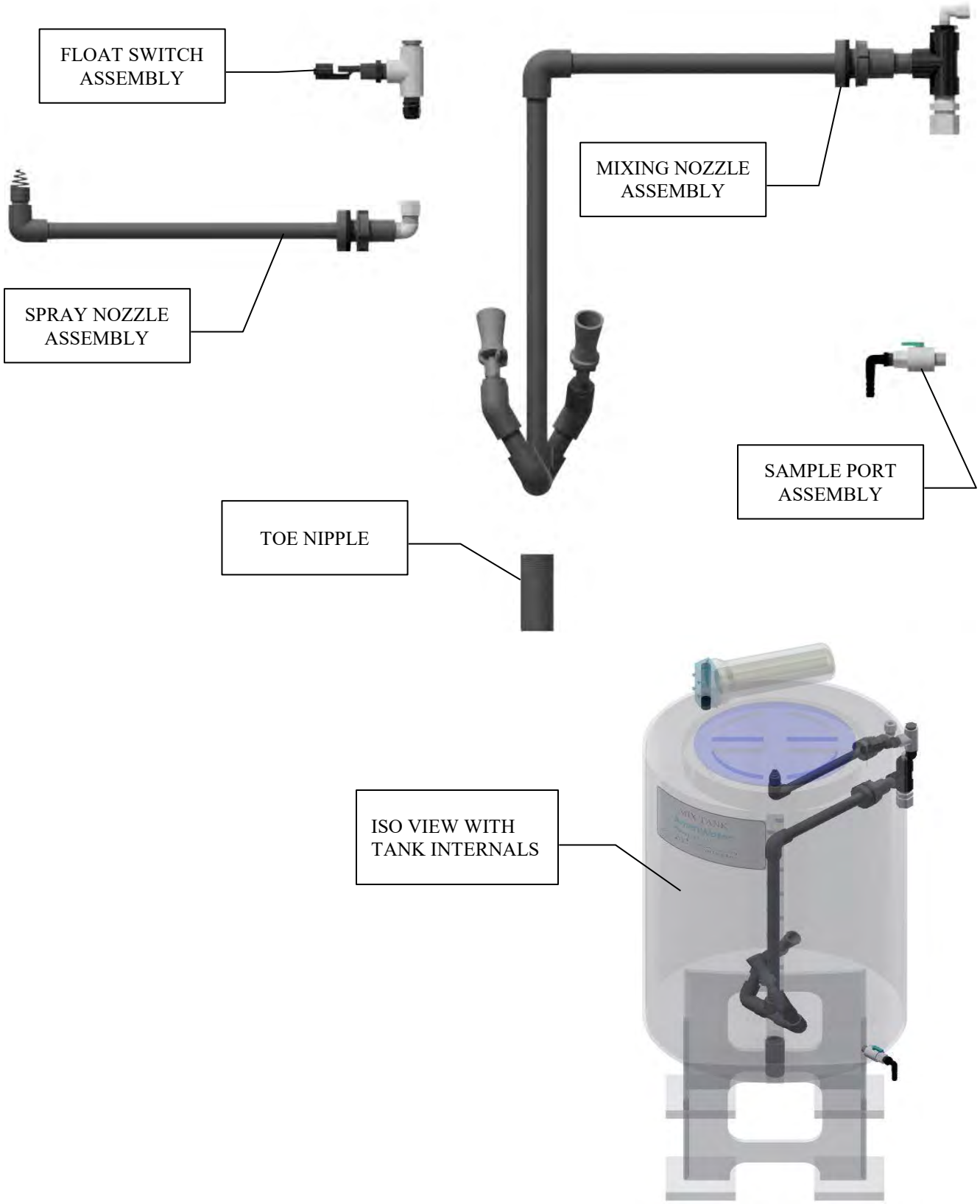

7.0 CONTROLLER SCHEMATIC

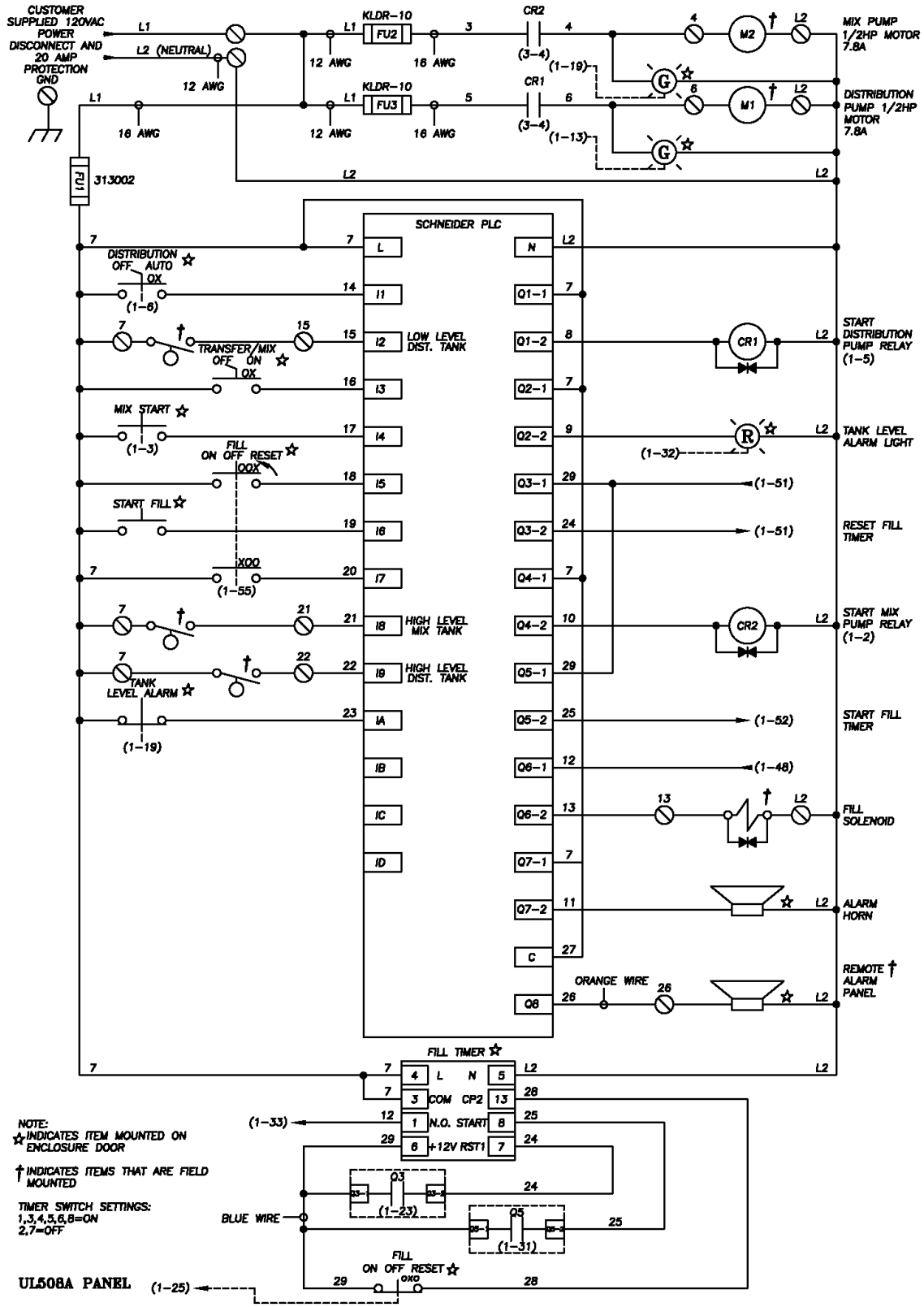

8.0 PARTS LIST

Description	Part Number
Filter 0.2 Micron 2.5 X 10	20-3021
Flow Control, 2.0GPMX.5MPT	42-0043
Fuse, 10 amp, FNM	RFNQ-R-10
Fuse, 2A	63760133
Hose Assy, Bicarb, Inlet, Disinfection	0110112-0103C
Logic Relay Controller	64-0026
Multifunction Digital Timer	64-0025
Peracidin Disinfectant, 2 Quarts	95-0006
Peracidin Disinfectant, 4 Quarts	95-0007
Pumps, .75 HP,1 Phase, 1" Inlet, 1" Outlet	80-0264
Q-Con, CPC, Female Coup x .38MPT, Polysulfone	16-0077
Q-Con, CPC, Female Coup, NSHD17008, With Shut Off, .5 HB	16-0076
Q-Con, CPC, Male Coup Insert, NSHD24008, With Shut Off, .5 MPT	16-0075
Q-Con, CPC, Male Insert x .38MPT, No Shut Off, Polysulfone	16-0078
Relay, 2-POLE, 25 AMP	64-0046
Test Strips Peracetic Acid Test	97HP20401
Test Strips Renal Check, Residual Peroxide	97PX20501
Test Strips Water Check 2 Low Level Chlorine/Chloromine	97CM20201
Test Strips Water Check Residual Chlorine/Chloromine	97RC22101
Test Strips, Ozone (in Water), 0.05 to >0.5 ppm	97K100-0111
Tubing .25OD, Blue	08760287
Tubing, .5X.063, Poly, Blue	08760280
Tubing, 3/4, PT2401BK, Black	08-0007
VAL, Ball, .5, True Union, PVC80, Panel Mount	041530953
VAL, Ball, .75, True Union, PVC80, Panel Mount	041530844
VAL, Check, .5FPT, 1/3#, White, PP, SMC (Return Loop)	55-0003
VAL, Check, .5FPT, PP, 3# Cracking (RO Inlet Water)	55-0010
VAL, SOL, .5FPT, NC, 120V, DIN	59-0002
Valve Ball 3/8” M X F (Sample Port & Drain)	041001
Valve, Ball, EL, .25MPTXFPT, PVC80 (Sample Port)	041004
Valve, Needle, .5, FPT, PVC80	04100002
KIT,BICARB SPRAY NOZZLE ASSY,55 GAL,MIX/DIST	911-9118
KIT,BICARB SPRAY NOZZLE ASSY,100-185 GAL.,MIX/DIST	911-9119
KIT,BICARB,MANIFOLD-PANEL,FEED	911-9120
KIT,BICARB TANK INTERNAL,MIX,55 GALLON	911-9121
KIT,BICARB TANK INTERNAL,MIX,100 GALLON	911-9122